SKN 300

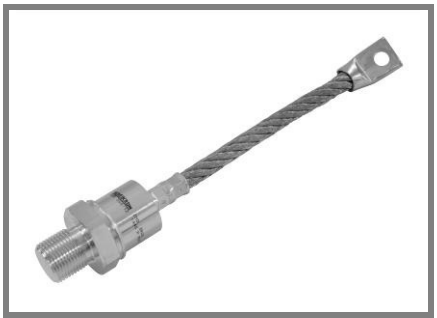

Stud Diode

Rectifier Diode

SKN 300
SKR 300

Preliminary data

Features

- Reverse voltages up to 1600 V
- Hermetic metal cases with glass insulator
- Threaded stud M16 x 1,5 mm. Also 3/4"–16 UNF 2A and M20 x 1,5 mm options.
- **SKN:** anode to stud
- **SKR:** cathode to stud

Typical Applications *

- All purpose high power rectifier diodes
- Cooling via heatsinks
- Non-controllable and half-controllable rectifiers
- Free-wheeling diodes
- Recommended snubber network:
  RC: 1,0 µF, 20 Ω (P_R = 2W),
  R_p: 25 KΩ (P_R = 20 W)

Notes:

for 3/4"-16 UNF thread version add UNF and for M20 x 1,5 mm thread version add M20 at description's end.
(e.g. SKR 300/04 M20)

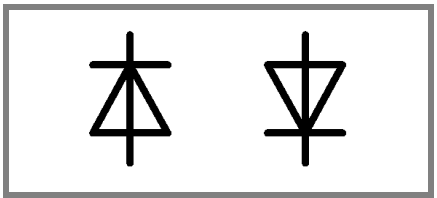

SKN SKR

V_{RSM} V	V_{RRM} V	I_{FRMS} = 500 A (maximum value for continuous operation) I_{FAV} = 300 A (sin. 180; T_c = 124 ºC)	
400	400	SKN 300/04	SKR 300/04
800	800	SKN 300/08	SKR 300/08
1200	1200	SKN 300/12	SKR 300/12
1600	1600	SKN 300/16	SKR 300/16

Symbol	Condition	Values	Units
I_{FAV}	sin. 180 ; T_C = 135 (120) ºC	255 (315)	A
I_{FSM}	T_{vj} = 25º C ; 8,33 ms	6500	A
	T_{vj} = 180º C ; 8,33 ms	5400	A
i^2t	T_{vj} = 25º C ; 8,3...10 ms	211000	A^2s
	T_{vj} = 180º C ; 8,3...10 ms	145000	A^2s
V_F	T_{vj} = 25º C, I_F = 800 A	max. 1,4	V
$V_{(TO)}$	T_{vj} = 160º C	max. 0,80	V
r_T	T_{vj} = 160º C	max. 0,6	mΩ
I_{RD}	T_{vj} = 180º C ; V_R = V_{RRM}	max. 60	mA
Q_{rr}	T_{vj} = 160°C, -di_F/dt = 10 A/µs	200	µC
$R_{th(j-c)}$		0,15	K/W
$R_{th(c-s)}$		0,03	K/W
T_{vj}		-40...+180	°C
T_{stg}		-55...+180	°C
V_{isol}		-	V~
M_s	to heatsink (SI units)	30	Nm
	to heatsink (US units)	270	lb.in.
a		5 * 9,81	m/s^2
m	approx.	250	g
Case		E 15	

 © by SEMIKRON

Dimensions in mm

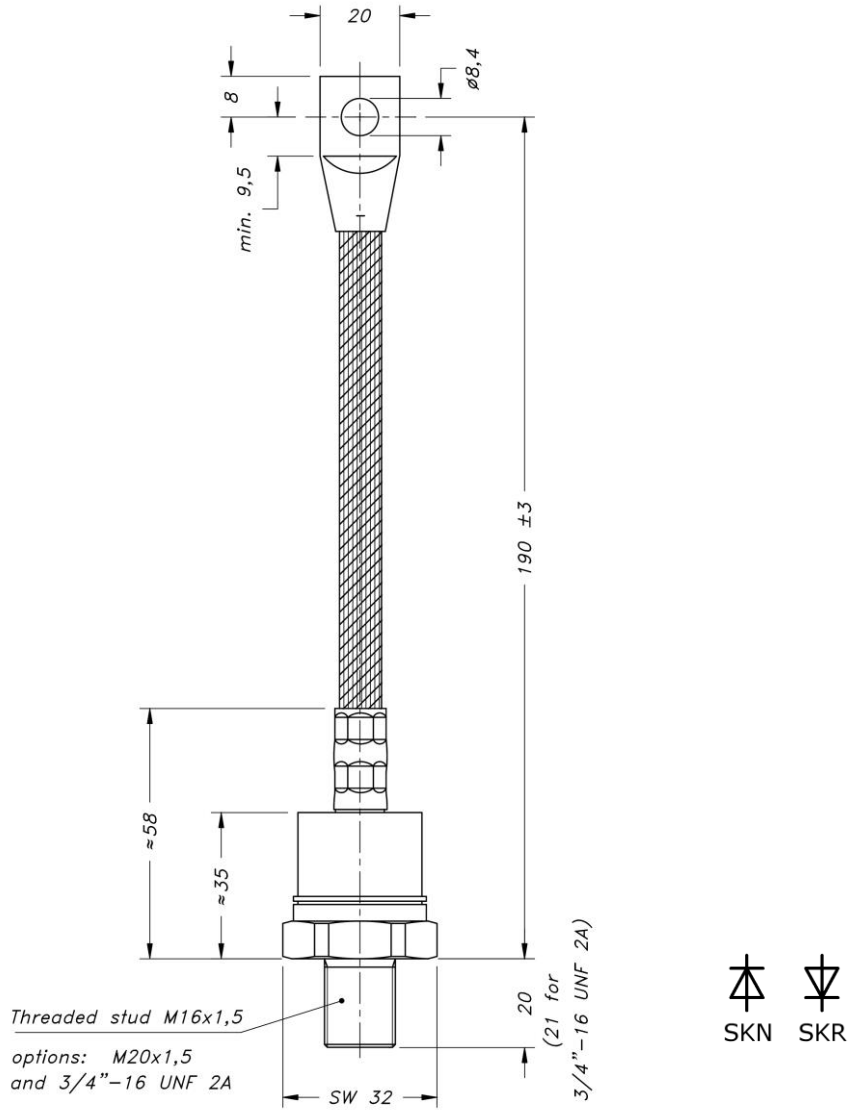

Case E15 (IEC 60191: A 15 M; JEDEC: DO-205 AB)

*IMPORTANT INFORMATION AND WARNINGS

The specifications of SEMIKRON products may not be considered as guarantee or assurance of product characteristics ("Beschaffenheitsgarantie"). The specifications of SEMIKRON products describe only the usual characteristics of products to be expected in typical applications, which may still vary depending on the specific application. Therefore, products must be tested for the respective application in advance. Application adjustments may be necessary. The user of SEMIKRON products is responsible for the safety of their applications embedding SEMIKRON products and must take adequate safety measures to prevent the applications from causing a physical injury, fire or other problem if any of SEMIKRON products become faulty. The user is responsible to make sure that the application design is compliant with all applicable laws, regulations, norms and standards. Except as otherwise explicitly approved by SEMIKRON in a written document signed by authorized representatives of SEMIKRON, SEMIKRON products may not be used in any applications where a failure of the product or any consequences of the use thereof can reasonably be expected to result in personal injury. No representation or warranty is given and no liability is assumed with respect to the accuracy, completeness and/or use of any information herein, including without limitation, warranties of non-infringement of intellectual property rights of any third party. SEMIKRON does not assume any liability arising out of the applications or use of any product; neither does it convey any license under its patent rights, copyrights, trade secrets or other intellectual property rights, nor the rights of others. SEMIKRON makes no representation or warranty of non-infringement or alleged noninfringement of intellectual property rights of any third party which may arise from applications. Due to technical requirements our products may contain dangerous substances. For information on the types in question please contact the nearest SEMIKRON sales office. This document supersedes and replaces all information previously supplied and may be superseded by updates. SEMIKRON reserves the right to make changes.