SKET 801/18 E

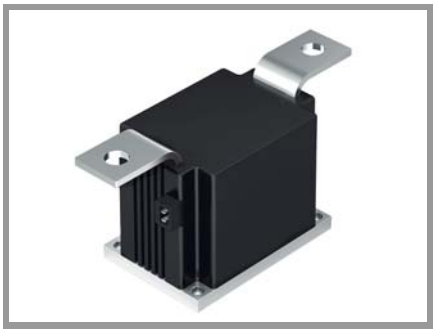

SEMIPACK® 6

Thyristor Modules

SKET 801/18 E

Features*

- Precious metal pressure contacts for high reliability
- Thyristor with amplifying gate
- UL recognized, file no. E 63 532

Typical Applications

- DC motor control (e. g. for machine tools)
- Temperature control (e. g. for ovens, chemical processes)
- Softstart application

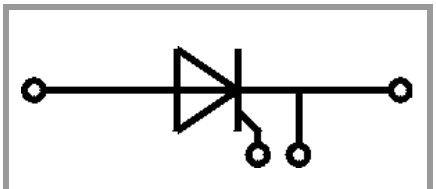

SKET

Absolute Maximum Ratings

Symbol	Conditions		Values	Unit
Chip				
$I_{T(AV)}$	sin. 180°	T_c = 85 °C	867	A
	T_j = 125 °C	T_c = 100 °C	599	A
I_{TSM}	t_p = 10 ms	T_j = 25 °C	35000	A
		T_j = 125 °C	30000	A
i^2t	t_p = 10 ms	T_j = 25 °C	6125000	A^2s
		T_j = 125 °C	4500000	A^2s
V_{RSM}	T_j = 25 °C		1900	V
V_{RRM}	T_j = 25 °C		1800	V
V_{DRM}	T_j = 25 °C		1800	V
$(di/dt)_{cr}$	T_j = 125 °C		200	A/µs
$(dv/dt)_{cr}$	T_j = 125 °C		1000	V/µs
T_j			-40 ... 125	°C
Module				
T_{stg}			-40 ... 130	°C
V_{isol}	a.c.; 50 Hz; r.m.s.	1 min	3000	V
		1 s	3600	V

Characteristics

Symbol	Conditions		min.	typ.	max.	Unit
Chip						
V_T	T_j = 125 °C, I_T = 3000 A				1.51	V
$V_{T(TO)}$	T_j = 125 °C				0.82	V
r_T	T_j = 125 °C				0.17	mΩ
I_{DD};I_{RD}	T_j = 125 °C, V_{DD} = V_{DRM}; V_{RD} = V_{RRM}				150	mA
t_{gd}	I_G = 1 A di_G/dt = 1 A/µs V_D = 0.67 * V_{DRM}	T_j = 25 °C			4	µs
t_{gr}		T_j = 25 °C		n.a.		µs
t_q	T_j = 125 °C			240		µs
I_H	T_j = 25 °C				500	mA
I_L	T_j = 25 °C, R_G = 33 Ω				2500	mA
V_{GT}	T_j = 25 °C, d.c.		2			V
I_{GT}	T_j = 25 °C, d.c.		250			mA
V_{GD}	T_j = 125 °C, d.c.				0.2	V
I_{GD}	T_j = 125 °C, d.c.				10	mA
$R_{th(j-c)}$	cont.	per chip			0.0376	K/W
		per module			0.0376	K/W
$R_{th(j-c)}$	sin. 180°	per chip			0.039	K/W
		per module			0.039	K/W
$R_{th(j-c)}$	rec. 120°	per chip			0.04	K/W
		per module			0.04	K/W
Module						
$R_{th(c-s)}$	chip, P12 (reference)				0.015	K/W
	module, P12 (reference)				0.015	K/W
M_s	to heatsink M6		5.1		6.9	Nm
M_t	to terminal M12		16.2		19.8	Nm
a					5 * 9.81	m/s^2
w				1950		g

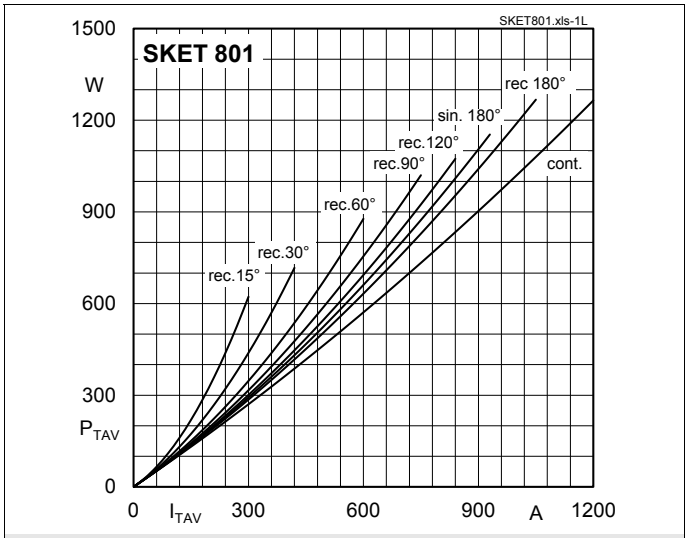

Fig. 1L: Power dissipation per thyristor vs. on-state current

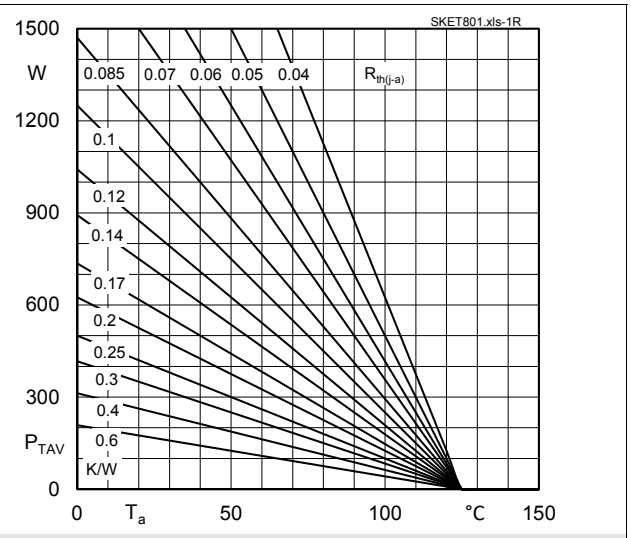

Fig. 1R: Power dissipation per thyristor vs. ambient temperature

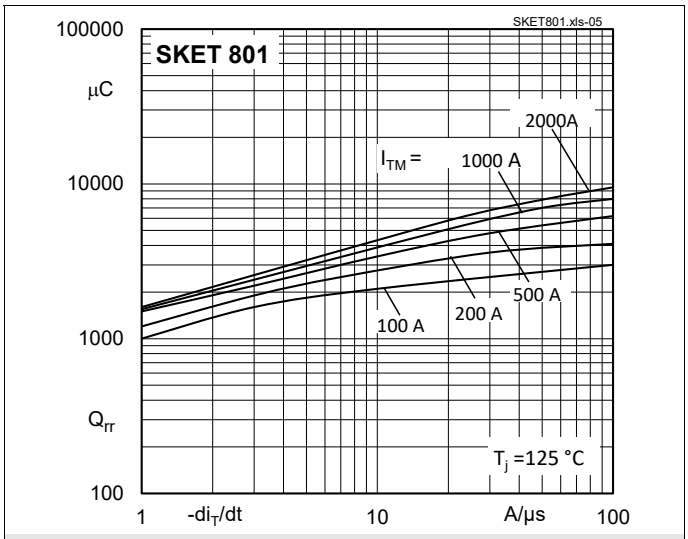

Fig. 5: Recovered charge vs. current decrease

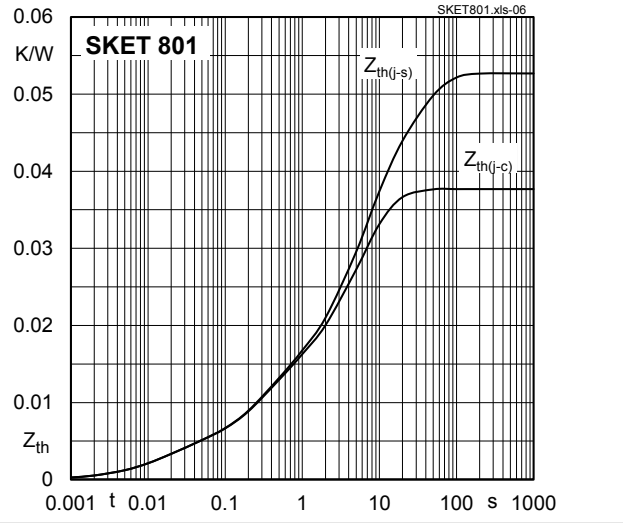

Fig. 6: Transient thermal impedance vs. time

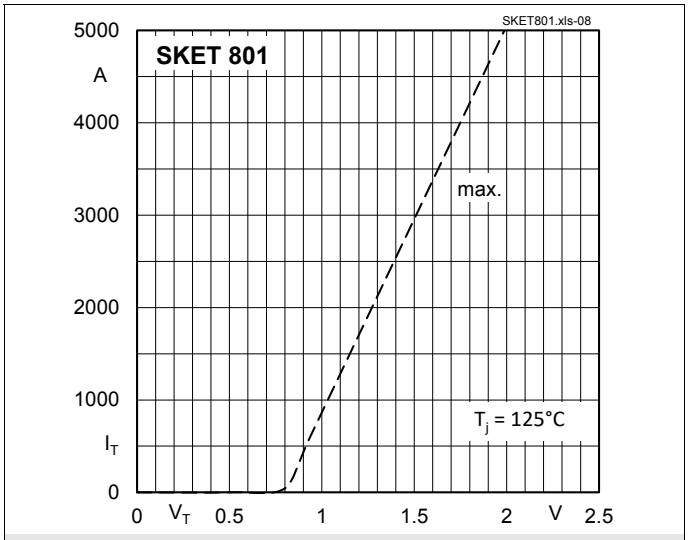

Fig. 7: On-state characteristics

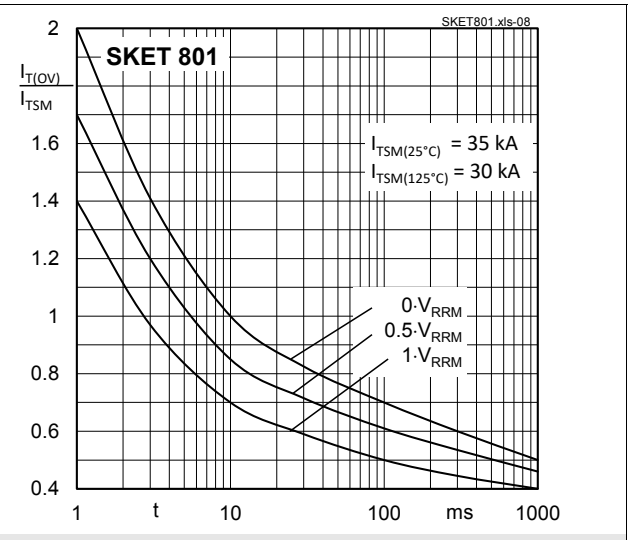

Fig. 8: Surge overload current vs. time

 © by Semikron Danfoss

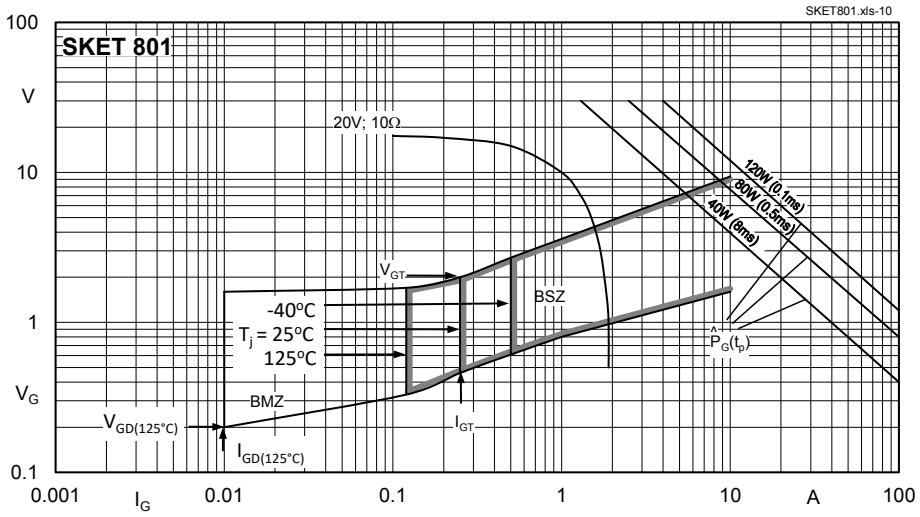

Fig. 9: Gate trigger characteristics

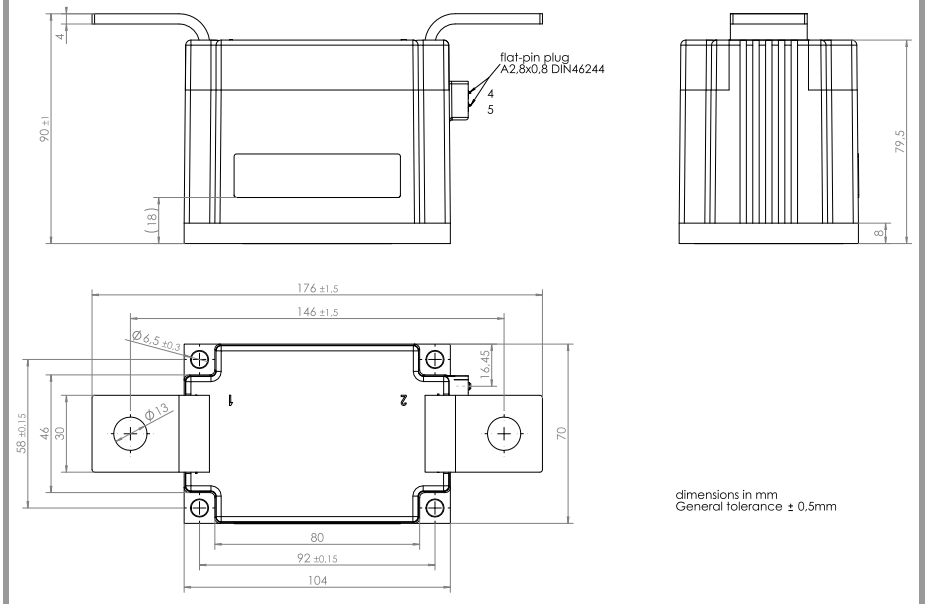

SEMIPACK 6

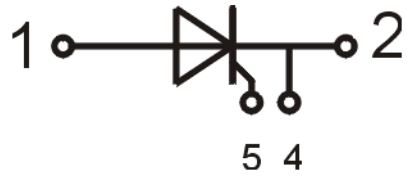

SKET

IMPORTANT INFORMATION AND WARNINGS

This is an electrostatic discharge sensitive device (ESDS) according to international standard IEC 61340.

*The specifications of Semikron Danfoss products may not be considered as any guarantee or assurance of product characteristics ("Beschaffenheitsgarantie"). The specifications of Semikron Danfoss products describe only the usual characteristics of Semikron Danfoss products to be expected in typical applications, which may still vary depending on the specific application. Therefore, products must be tested

for the respective application in advance. Resulting from this, application adjustments of any kind may be necessary. Any user of Semikron Danfoss products is responsible for the safety of their applications embedding Semikron Danfoss products and must take adequate safety measures to prevent the applications from causing any physical injury, fire or other problem, also if any Semikron Danfoss product becomes faulty. Any user is responsible for making sure that the application design and realization are compliant with all laws, regulations, norms and standards applicable to the scope of application. Unless otherwise explicitly approved by Semikron Danfoss in a written document signed by authorized representatives of Semikron Danfoss, Semikron Danfoss products may not be used in any applications where a failure of the product or any consequences of the use thereof can reasonably be expected to result in personal injury. No representation or warranty is given and no liability is assumed with respect to the accuracy, completeness and/or use of any information herein, including without limitation, warranties of non-infringement of intellectual property rights of any third party. Semikron Danfoss does not convey any license under its or a third party's patent rights, copyrights, trade secrets or other intellectual property rights, neither does it make any representation or warranty of non-infringement of intellectual property rights of any third party which may arise from a user's applications.

 © by Semikron Danfoss